Jig Holder and Jigs

GET MORE FROM YOUR ROUTER

Routing with Tom O'Donnell

Jigs holders are prepared to hold the material to be cut and the template securely in position. Each Jig is designed to suit the size of the material to be cut. Some are long and narrow others are small rectangular or square.

'Special' Jigs are constructed for special projects; i.e. inserting hinges, routing mortice and tenon joints, cutting circles with the router, routing elliptical shapes, Routing a tapered leg, etc. Each jig is designed to make routing Safer, and produce the project quicker and more accurately.

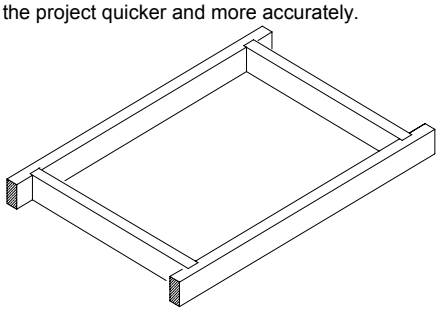

Jig Holder.

Jig holder is a simple box. The box is 400 x 300 x 40mm (internal dimensions.) the purpose of the Jig holder is to hold the jig that will hold material secure, and also position the template correctly for each process. The material can either be placed in position and fixed to the base of the Jig holder or attached to a Jig that is situated in the base of the jig holder. This will depend on the thickness of the material to be used for the project.

If the jig has to be inserted into the jig holder it should be cut from a piece of Plywood or MDF 9-16mm thick 400mm x 300mm, This will depend on the thickness of the material to be cut and the template to be used. When all the pieces are inserted into the jig holder the template should be at least 1mm higher than the sides of the jig holder to ensure the router base will clear the Jig Holder. The material to be cut is usually located in the centre and can be held securely in position using one of a number of methods of fixing. In the diagram below simple shelf supports are used.

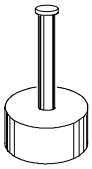

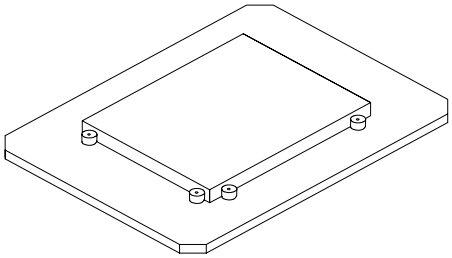

As an alternative to the shelf supports small wooden blocks of timber can also be used to secure the material to the jig. These can be fixed to the base of the Jig Holder or to a separate Jig that can be inserted into the jig holder.

Securing the Template

The template can be held secure with the aid of 'Tee nuts and thumb screws positioned round the jig holder.

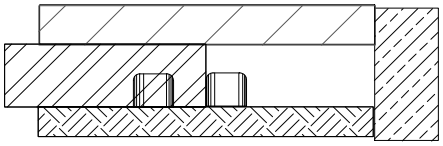

Various templates can be produced for a variety of projects, using the same jig holder.
Illustrated is the template to produce Elliptical Trinket boxes fitting into the same Jig Holder

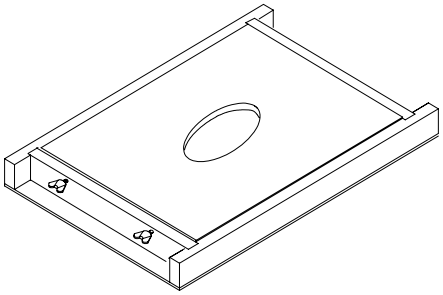

It has been stated in a number of routing magazines and books, *"The Drawing Board has been overlooked when planning routing projects."* Take out the drawing board to carefully plan the stages of work and procedures to complete the projects. As we progress from project to project you will see how the 'Drawing Board' plays an important roll in.

(1) Solving the problem.
(2) Achieving satisfactory results.
(3) Finding new methods of using the router.
(4) Complete many projects much quicker.
(5) Completing the project with greater safety.

The clock design which appeared in one of the routing magazines as an example. The original author had his own method of producing the shape with the aid of forstner bits. The method

has been altered to produce the completed clock with the router in the plunge mode. This will introduce greater safety awareness with the router. Note; the clock was one of the many projects I introduced to members of the woodworking group at the Association of the Blind W.A. by people who are V.I.P. It was a project that could be completed by a totally blind person once the material was secured in the Jig holder and the templates were produced. (Vision Impaired Person)

Making or Buying Jigs.

Jigs and templates are not always available for purchase for the project you are producing, and therefore it will be necessary to design and construct you own. Jigs will not only introduce *Safety Awareness* but will also improve the standard of finish on many projects that can be completed with a router. With a firm understanding of the use of the router with jigs and templates may eliminate the need to purchase other speciallity power tools.

Making the Jig

It could be argued that more time is spent making the jigs and templates than completing the project. Sample: Picture frame. Illustrated

Making one template will allow you to produce a number of the same article all exactly the same size. Producing a second template which can also act as a Jig in the base of the Jig Holder. The rebate for the glass and photograph can be routered before the material is removed from the Jig Holder leaving the external edge to be completed with the router in the router table. **Constructing your own jigs and templates will enable you to accomplish a greater variety of projects.**

In the construction of some small objects Elliptical Trinket boxes there is a need to construct jigs and templates, even if there are only a few articles to be produced.

Constructing 'Mortice & Tenon' Joints

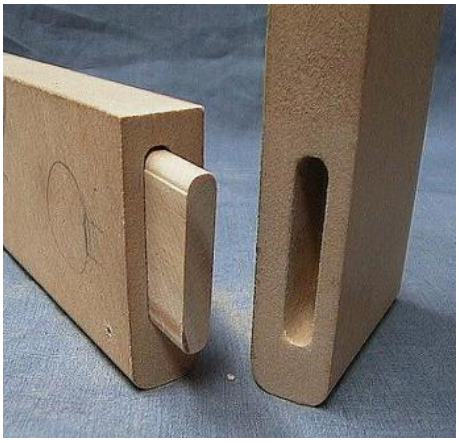

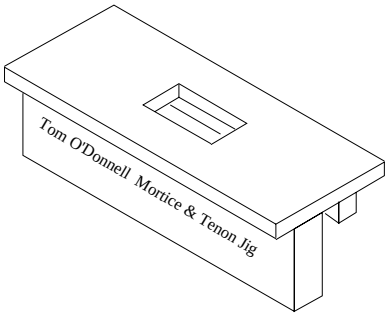

In the above example the mortice is routered in both the stile and the rail of the frame. This will require the construction of a simple jig to hold the material secure and position the mortice correctly each time

e.g. Cutting 'Mitres'

Producing a mitre can be completed with the aid of a

'Drop Saw' or a simple mitre saw. The following Jig was introduced to assist people with Vision impairment to rout a mitre when constructing frames for a small table. With the aid of the jig illustrated and a simple template they were able to produce perfect mitres each time.

Inserting Special Hinges

Without constructing the jig and template it would not have been possible to complete many projects. Here the simple jig is similar to

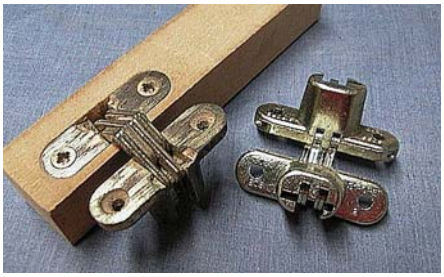

the morticing jig and produced to suit the variety of 'Soss' hinges that is available for a variety of doors

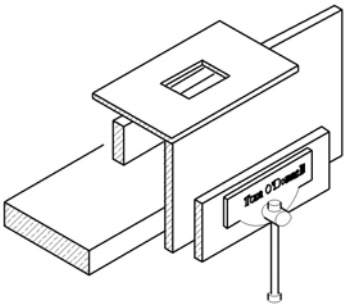

Small frame measuring 150mm long 60mm wide and 8mm square in section with rebate 4mm x 1.5mm illustrated was cut

from solid timber again producing an alternative Jig Holder and template construction

With a firm understanding, how the template guide is used will introduce you to greater variety of new projects that can be achieved with greater accuracy and safety

There are many books available on ROUTING giving details of routers, router bits, safety precautions and simple routing applications and techniques, unfortunately there has been little published illustrating the use of the guides and the construction of simple jigs that can be produced in your own workshop. Woodworking magazines and lately 'ROUTER MAGAZINES' are available for purchase to keep up to date with what is new on the market, and the availability of manufactured jigs to make routing easier.

Many projects appearing in these publications could have been constructed with greater safety and accuracy if the template guides had been used, and the material held secure in the jig holder.

The base of the dish illustrated was produced with the router in the plunge mode using the same templates used to rout the clock with additional templates

added and the introduction of other cutters and template guides completing the project by adding the lid.

The same set of templates can be used to produce a picture frame in the same design.

The same jig holder illustrated above is capable of assisting in the production a number of projects, such as cabinet doors.
This will require again introduce new routing techniques that will enable us to consider a change in the way we have been using the router for years.

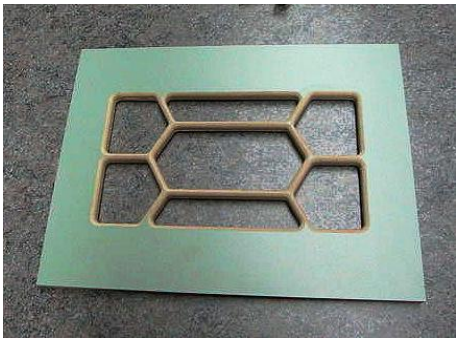

The various templates required routing the pattern above to produce the small cabinet door 400 x 300. It is the setting out of the template shapes along with the template guides and cutters required that need to be calculated

Increase the overall size of the jig holder to rout your own Kitchen cabinet doors for example. The jig and templates are increased in size, still using the same principle of holding the material.

Door size 700/600 x 420/400.

The glass is held secure with a 'special' beading routed from 9mm MDF to the same shape as the front

The above designs require a great deal of preparation to produce the templates. What is important it is possible to achieve such results with the aid of the template guides and the router used in the plunge mode.

Solid panel doors

Routing solid panel doors is not as complex as producing the glass framed doors above. Selecting a 'Face/Edge cutter controlled with the necessary template guide will produce the pattern on the door.

Simple template produced to rout the above pattern on a solid panel door.

(Note it is possible to construct an adjustable jig to accommodate the various widths of doors.)

This introduction to 'Jig Holder and Templates' has illustrated only a sample of what can be achieved by constructing a simple Jig Holder. Consult the other chapters to see how Jigs and Templates are used for specific projects.
Trinket boxes in a variety of shapes can be routered with ease.

With a firm understanding on how the template guides are used will introduce you to new projects that can be achieved with greater accuracy and safety.

Flush door handles cut from solid timber

Sample of hardware that can be inserted with the router once the Jig and Template have been constructed.

Curved mantle supports..

and.. **Grandfather clock Mouldings.**

This introduction to Jigs and Templates has

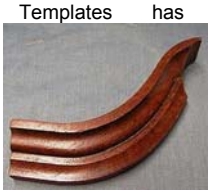

introduced projects that can be achieved by constructing a simple Jig Holder and making your own Templates.

Consult other chapters to see how Templates are used to complete the specific projects illustrated above.

Learn the art of Jig Making and it will change your style of routing.

Router Specialist
Tom O'Donnell
2008